High Power Industrial Generator with SOUND ATTENUATION CANOPY

PS0DVS633

POWER RATING	4833 rpm 283 Hz	4;33 rpm 293 Hz
Prime	301 kVA, 241 kW	316 kVA, 253 kW
Standby	331 kVA, 265 kW	348 kVA, 278 kW

Generator set consisting of engine and alternator mounted on a fabricated steel profile base, painted with a phosphate primer and top coat.

The alternator is directly coupled to the engine flywheel housing to SAE standards. The rotor is fixed to the flywheel using steel discs for flexibilty. Perfect alignment and the absence of vibration are thus guaranteed.

The unit is fixed to the baseframe using anti-vibration pads.

The set is supplied with a **SOUNDPROOFED METAL CANOPY** in all versions. This canopy is covered on the inside with soundproofing material added to the silencer and gives a **noise level of 68 db(A) at 7 mts.**

ENGINE

Type..... 4-stroke diesel engine - direct injection

Technical Data

Manufacturer ..... Volvo Penta
Model..... TWD 1210 G
No. of cylinders..... 6
Engine capacity ..... 11,980 cc
Bore ..... 130.17 mm
Stroke ..... 150 mm
Compression ratio 13.9:1
Aspiration..... Turbocharged
Cooling ..... Water cooled
Engine speed 50 / 60 Hz ..... 1500 / 1800 rpm
Prime power 50 / 60 Hz..... 365 / 385 hp ISO 3046
Fuel consumption 100% load 50 / 60 Hz..... 64 / 69 ltr/h
Fuel tank capacity .....365 litres
Approximate running time without refill 50 / 60 Hz .....6 / 5 hours

Cooling system

Closed circuit water cooled with expander tank included in the radiator. Tropicalised radiator and pusher fan with guard. Equipped to work at ambient temperature of up to 52º C.

Cooling air flow from fan 50 / 60 Hz ..... 195 / 195 m3/min
Cooling system capacity..... ..... 52.5 litres

Lubrication system

Forced lubrication using gear driven pump. Oil filter

Oil sump capacity ..... 34 litres
Consumption ..... 0.38 ltr/h

Turbocharged aspiration via dry air filter and intermediate water cooling system of combustion air

Combustion air flow 20.9 m3/min

Injection pump in line with centrifugal governor. Fuel filter and pre-filter.

24 V electric starting system. Axial starter motor. 2x180 Ah battery. 60 Amp battery charging alternator. Oil pressure and engine temperature sensors.

Automatic engine shutdown for low oil pressure, low fuel level, high temperatureand battery charge defect.

Consists of silencer with 10 db(A) noise reduction, flexible exhaust pipe and brackets. Residential silencer optional.**ALTERNATOR**

Synchronous, three phase and brushless. Self regulation via automatic voltage regulator maintaining voltage within +/- 1.5%. Class “H” insulation. All windings are impregnated with ployester resin, making them resistant to acids and oil. IP 22 protection. Electrical characteristics to BS 5000, VDE 0530, UTE 5100, NEMA MG 1-22, CMA IEC 34, CSA 22,2 and AS 1359. Harmonic distortion below 3,5%. Radio interference suppression to BS-800.

Manufacturer	Stamford
Model.....	HC 444 D
Power rating	295 kVA at 1500; 350 kVA at 1800 rpm
Voltage (*).....	380/220 V three phase
Frequency.....	50 / 60 Hz
Speed	1500 / 1800 rpm
Regulation	Electronic
Nominal current.....	448 A

(*) 12 wire output permitting reconnection to any existing voltage.

Th**DVRS**633 generator set may be supplied in the following versions:

STATIONARY VERSION with SOUND ATTENUATION CANOPY

PS0DVS633

In the stationary version, the set is supplied on a skidbase with a control panel operated manually using an ignition key.

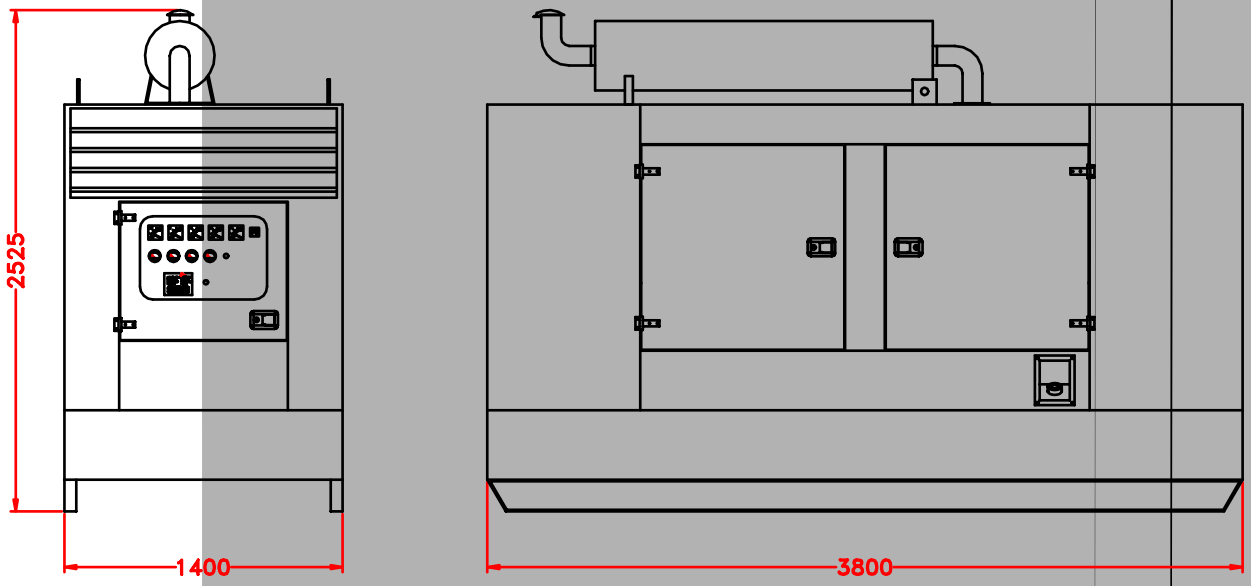

Control panel

Metal cabinet, with IP 54 protection, mounted on the frame with anti-vibration pads.

Equipped with:

- 3 Ammeters.
- Frequency meter.
- Voltmeter with selector switch.
- Hours run meter.
- Three phase output terminals.
- Engine temperature gauge.
- Fuel gauge.
- Oil pressure gauge.
- Battery charge ammeter.
- On light.
- Heater button.
- Overcurrent indicator lamp.

Control card including: ignition key, start/stop buttons and Indicator lights for low oil pressure, battery charge, high temperature, low fuel level, overload and start-up failure.

MOBILE VERSION with SOUND ATTENUATION CANOPY PS0DVS633

Set on baseplate mounted on independent trailer. Incorporates metal canopy housing the control panel which is operated manually via an ignition key.

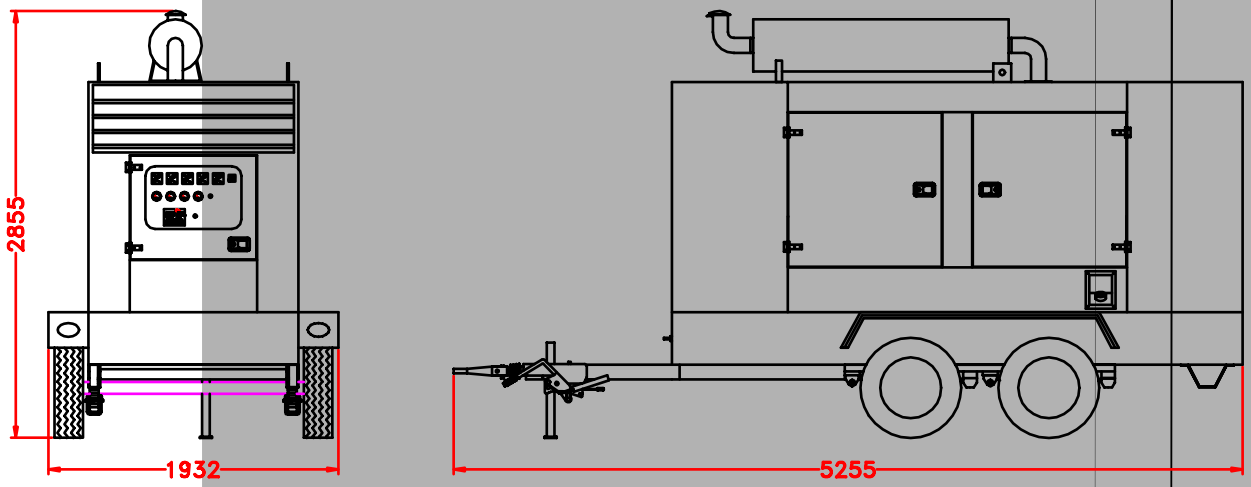

Metal canopy

Ideal for outdoor use, it is painted with a phosphate primer and a long lasting top coat.

Trailert

Made up of: wheels with tyres, DIN towing eye, double rubber axle suspension, surge brake and support leg. Jockey wheel on request. As an option, A TRAILER ADAPTED FOR ROAD TRANSORTATION may be supplied

Control panel

Metal cabinet, with IP 54 protection, mounted on the baseframe with anti-vibration pads.

Equipped with:

- 3 Ammeters.
- Frequency meter.
- Voltmeter with selector switch.
- Hours run meter.
- Three phase output terminals.
- Engine temperature gauge.
- Fuel gauge.
- Oil pressure gauge.
- Battery charge ammeter.
- On light.
- Heater button.
- Overcurrent indicator lamp.

Control card including: ignition key, start/stop buttons and Indicator lights for low oil pressure, battery charge, high temperature, low fuel level, overload and start-up failure.

AUTOMATIC VERSION PS DVS 633

The automatic version generator set is supplied on a skidbase with an automatic start/stop panel for mains failure.

Mounted in a metal cabinet with IP 54 protection and supplied loose for wall mounting.Includes control, measuring and transfer system.

Automatically monitors the mains, and, if the mains fails (in one or all three phases) connects the consumers to the generator set via mechanically and electrically interlocking contactors. When the mains is restored, the load is reconnected to the mains, the set idles and then stops. Equipped with:

- Push button controls, indicating lamp and protection fuses.
- No. of start up attempts: 3
- Three phase voltage monitor with adjustable values.

Consists of the following items:

- 3 Ammeters
- 1 Voltmeter
- 1 mains-generator set voltmeter selector switch.
- 1 Frequency meter
- 1 Battery voltmeter.
- Selector switch for Disconnect, Automatic Service, Manual Service and Test.
- Off button.
- Heater indicator lamp
- Battery maintenance system.
- Battery indicator lamp.
- Audible alarm for faults
- Visible alarm system for low oil pressure, high temperature and/or overload
- Large emergency stop push button.

The set may be selected to run manually or automatically: When running manually a pushbutton is used for shutdown and a selector switch is used for start up and transfer.

Made up of two mechanically and electrically interlocking 500 A contactors.

WORKING VOLTAGE: 380/220 V

In this version, the set incorporates a heater which aids diesel engine start-up and response. It consists of a tank connected to the engine cooling system and a heating element with an adjustable thermostat.