PowerSources
Produktion u. Vertrieb von Stromversorgungen

ROBERT-BOSCH-STR. 7 D - 40668 MEERBUSCH
TEL.: +49 - 2150 - 9128 00
Fax: +49 - 2150 - 9128 09
http: www.powersources.de
E-mail: wvs@powersources.de

Industrial Generator DL-6

POWER RATING	1500 rpm/50 Hz	1800 rpm/60 Hz
Prime	6kVA, 4.8kW	7.6kVA, 6.1kW
Standby	6.4kVA, 5.4kW	8.4kVA,6.7kW

Generator set consisting of engine and alternator mounted on fabricated steel profile baseframe, painted with phosphate primer and top coat.

The alternator is coupled directly to the engine to SAE standards. The rotor is fixed to the flywheel using steel discs for flexibility. This structure assures perfect alignment and the absence of vibrations.

The unit is fixed to the baseframe using antivibration dampeners.

ENGINE

Type ..... 4 stroke diesel with direct injection.

Technical Data

Manufacturer ..... Lombardini
Model ..... 4 LD 820 L
No. of cylinders 1
Engine capacity 817cc
Bore ..... 102 mm
Stroke 100mm
Compression ratio 17.5:1
Aspiration ..... Atmospheric
Engine speed 50 / 60 Hz ..... 1500 / 1800 rpm
Prime power ..... 9.1 / 11.2 HP DIN Nb 6271
Fuel consumption 100% load 50 / 60 Hz ..... 2 / 2.5 ltr/h
Fuel tank capacity ..... 11.5 litres
Approximate running time 50 / 60 Hz ..... 5.5 / 5 hours without refill
Noise level ..... 77 dB(A) at 7 metres

Cooling system

Cooled by air forcing fan on flywheel.
Cooling air flow 1500 / 1800 r.p.m. ..... 6 / 7.2 m3/min

Lubrication system

Forced lubrication via gear type pump. Oil filter.
Oil sump capacity ..... 2.6 litres
Consumption ..... 0.027 kg/h

... WHERE THE POWER COMES FROM ...

ROBERT-BOSCH-STR. 7 D - 40668 MEERBUSCH
TEL.: +49 - 2150 - 9128 00
Fax: +49 - 2150 - 9128 09
http: www.powersources.de
E-mail: wvs@powersources.de

Air intake system

Natural intake via dry air filter, with changeable cartridge.
Aspirated air flow 1500 / 1800 r.p.m..... 0.5182 / 0.622 m³/min

Injection system

Injection pump submerged in block with centrifugal regulator. Fuel filter

Electric system

12 V electric starting system. Axial starter motor. 70 A.h. battery. Battery charging alternator. Oil pressure gauge.

Protection system

Visual alarm if oil pressure too low. Optionally, alarm system with automatic engine shutdown if oil pressure too low.

Exhaust system

Exhaust silencer with 10 dB(A) noise reduction.

ALTERNATOR

Three phase and brushless. Electronic regulation on all three phases. Class “H” insulation. All windings are impregnated with polyester resin, making them resistant to acids and oil. IP 23 protection. Electrical characteristics to IEC.34.1, CEI 2-3, VDE 0530 and BS 4999 - 5000. Radio interference suppression to grade G of VDE 0875.

Manufacturer	Mecc Alte
Model	EC3 SA/4
Power rating 1500 / 1800 rpm	6.5kVA / 7.8kVA
Voltage(*)	230/400V three phase
Frequency	50 / 60Hz
Speed	1500 / 1800rpm
Regulation	Electronic
Nominal current 1500 / 1800 rpm	9.88A / 11,85A

(*) Other voltages: PLEASE CONSULT.

VERSIONS

The **DL-6** may be supplied in the following versions:

- ***STATIONARY***
- ***STATIONARY WITH CANOPY***
- ***MOBILE WITH CANOPY***
- ***AUTOMATIC.***

ROBERT-BOSCH-STR. 7 D - 40668 MEERBUSCH
TEL.: +49 - 2150 - 9128 00
Fax: +49 - 2150 - 9128 09
http: www.powersources.de
E-mail: wvs@powersources.de

STATIONARY Version DL-6

In the STATIONARY version, the generator set is supplied on a skid base with a control panel featuring an ignition key for manual start-up.

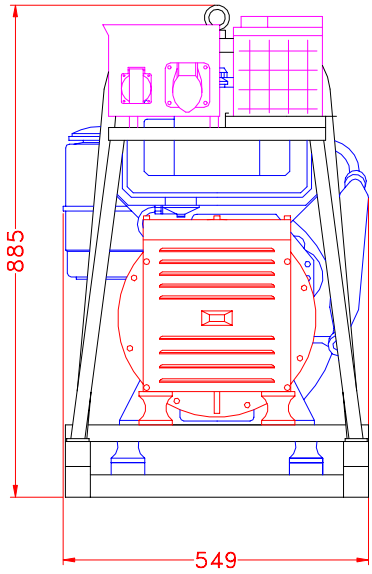

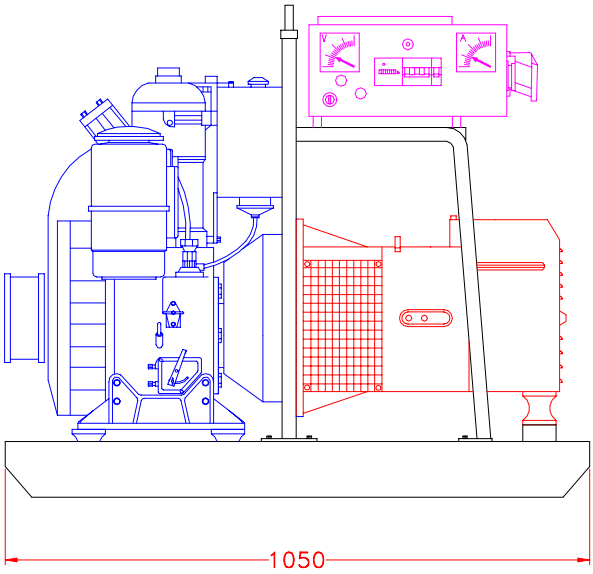

CONTROL PANEL

Metal cabinet mounted on chassis using anti-vibration dampeners.

Control panel features:

- Thermo - magnetic circuit breaker
- 1 Ammeter .
- Voltmeter
- Hours run meter.
- Three phase output socket
- Single phase socket
- On light.
- Battery charge indicator lamp
- Oil pressure indicator lamp
- Ignition key
- Shutdown using manual choke.

STATIONARY Version with Canopy DL6-C

In this version, the set is supplied on a base frame with axle, wheels and handle. The control panel is mounted on the frame with anti-vibration dampeners.

Control panel

Equipped with:

- Thermo - magnetic circuit breaker
- 1 Ammeter .
- Voltmeter
- Hours run meter.
- Three phase socket
- Single phase socket
- On light
- Battery charge lamp
- Oil pressure lamp
- Ignition key
- Shutdown using manual choke.

PowerSources
Produktion u. Vertrieb von Stromversorgungen

ROBERT-BOSCH-STR. 7 D - 40668 MEERBUSCH
TEL.: +49 - 2150 - 9128 00
Fax: +49 - 2150 - 9128 09
http: www.powersources.de
E-mail: wvs@powersources.de

MOBILE Version with canopy DL6-MC

Set on baseplate mounted on independent trailer. Incorporates metal canopy housing the control panel and is started manually using an ignition key.

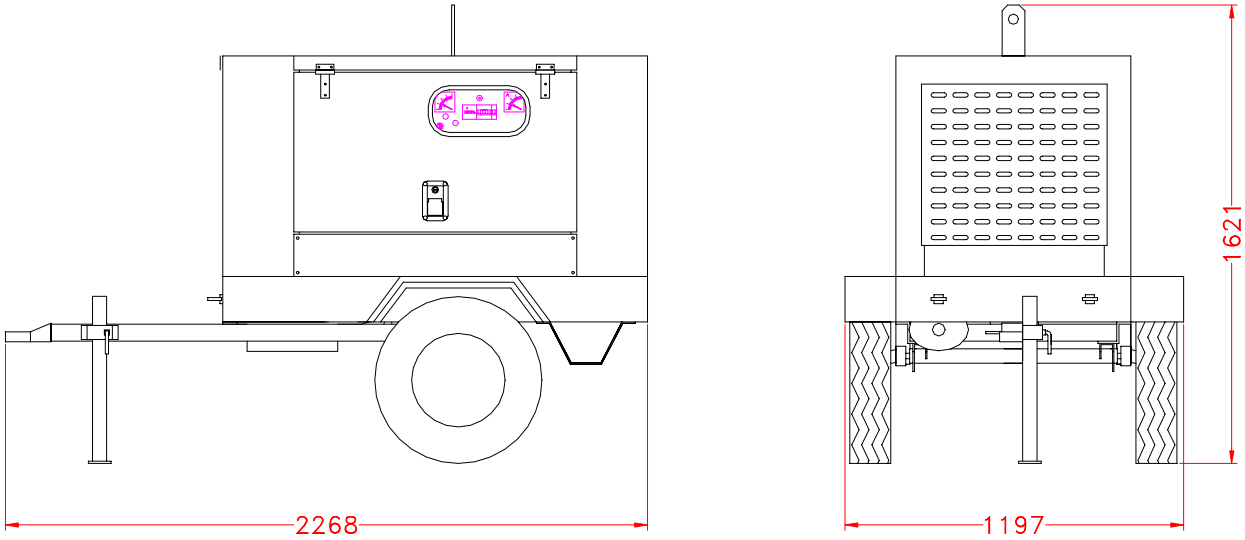

Metal canopy

Ideal for outdoor use, it is painted with a phosphate primer and long lasting top coat.

Trailer

Made up of: wheels with pneumatic tyres, DIN towing eye, rubber axle suspension and support leg. Jockey wheel on request.

As an option, A REGULATION TRAILER KIT for road transportation may be supplied.

Control panel

Metal cabinet mounted on baseframe with anti-vibration pads, equipped with:

- Thermo - magnetic circuit breaker.
- 1 Ammeter.
- Voltmeter.
- Hours run meter.
- Three phase output socket.
- Shutdown using manual choke.
- Single phase socket.
- On light
- Battery charge lamp.
- Oil pressure lamp.
- Ignition key

... WHERE THE POWER COMES FROM ...

PowerSources
Produktion u. Vertrieb von Stromversorgungen

ROBERT-BOSCH-STR. 7 D - 40668 MEERBUSCH
TEL.: +49 - 2150 - 9128 00
Fax: +49 - 2150 - 9128 09
http: www.powersources.de
E-mail: wvs@powersources.de

AUTOMATIC Version DL6-N

The automatic version of this generator set is supplied on a skid base with an automatic start-stop panel for mains failure.

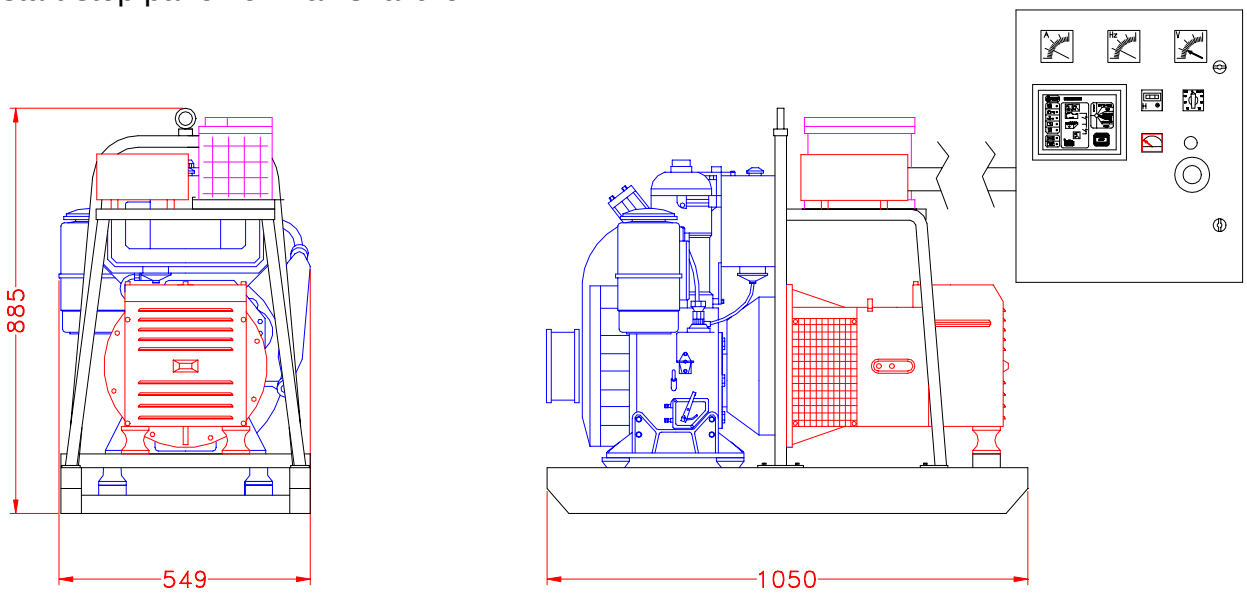

ELECTRIC PANEL

Enclosed in metal cabinet with IP 54 protection for wall mounting. Includes monitoring and control system, measuring and handling apparatus and transfer system.

Monitoring and control system

- Automatically monitors the mains, and, if the mains fails (in one or all three phases) connects the consumers to the generator set via mechanically and electrically activated contactors. When the mains is restored, the load is reconnected to the mains, the set idles and then stops. No. of start-up attempts: 3.
- Selector switch for Off, Automatic Mode, Manual Mode and Test.
- The generator set may be selected to run manually or automatically. In manual mode starting, stopping and load transfer are performed via a selector switch.
- Three phase voltage monitor with adjustable values.

Measuring equipment

Consists of the following items:

- 1 Ammeter
- 1 Voltmeter
- 1 mains-generator set voltmeter selector switch
- 1 Frequency meter
- 1 Battery voltmeter.
- Off button.
- Battery maintaining system.
- Battery indicator lamp.
- Battery charge indicator lamp.
- Large emergency stop pushbutton.
- Audible and visual signal for low fuel level.
- Alarm system ordering generator set to disconnect and stop, with audible and visual signal for:
- Start-up failure
- Low oil pressure
- High water/engine temperature
- Overload
- Protection fuse.
- Thermo-magnetic circuit breaker.

Transfer system

Made up of two electrically and mechanically activated contactors. WORKING VOLTAGE: 380/220Vac

... WHERE THE POWER COMES FROM ...