PowerSources
Produktion u. Vertrieb von Stromversorgungen

ROBERT-BOSCH-STR. 7 D - 40668 MEERBUSCH
TEL.: +49 - 2150 - 91 28 00
Fax: +49 - 2150 - 91 28 09
http: www.powersources.de
E-mail: wvs@powersources.de

Industrial Soundproof Genset — Series DPS27

POWER RATING	1500 rpm/50 Hz	1800 rpm/60 Hz
Prime	27.5kVA, 22.0kW	32.5kVA, 25.9kW
Standby	30.0kVA, 24.1kW	35.5kVA, 28.5kW

Generator set consisting of engine and alternator mounted on a fabricated steel profile base, finished with a phosphate coating and top coat.

The alternator is directly coupled to the engine flywheel housing to SAE standards. The rotor is fixed to the flywheel using steel discs for flexibilty. Perfect alignment and the absence of vibration are thus guaranteed.

The unit is fixed to the baseframe using anti-vibration pads.

The set is supplied with a **SOUNDPROOFED METAL CANOPY** in all versions. This canopy is covered on the inside with soundproofing material whici added to the silencer gives a **noise level of 68 db(A) at 7 mts.**

ENGINE

Type .....4-stroke diesel engine with direct injection.

Technical Data

Manufacturer .....Perkins
Model.....3.152.4
No. of cylinders.....3
Engine capacity.....2500 cc
Bore.....91.4 mm
Stroke.....127mm
Compression ratio .....16.5 : 1
Aspiration .....Atmospheric
Cooling .....Water cooled
Engine speed 50 / 60 Hz .....1500 / 1800 rpm
Prime power 50 / 60 Hz.....33.9 /40.4 bhp ISO 3046
Fuel consumption 100% load 50 / 60 Hz.....6.9 / 8.3 ltr/h
Fuel tank capacity .....76 litres
Approximate running time without refill 50 / 60 Hz.....10 / 9 hours

Cooling system

Closed circuit water cooled with expander tank included in the radiator. Tropical radiator and pusher fan with guard. Equipped to work at ambient temperature of up to 52º C.

Cooling air flow from fan 50 / 60 Hz ..... 85 / 94 m3/min
Cooling system capacity..... ..... 9.9 litres

Lubrication system

Forced lubrication using gear driven pump. Oil filter

Oil sump capacity ..... 5.75 litres
Consumption ..... Max. 1% of fuel consumption

ROBERT-BOSCH-STR. 7 D - 40668 MEERBUSCH
TEL.: +49 - 2150 - 91 28 00
Fax: +49 - 2150 - 91 28 09
http: www.powersources.de
E-mail: wvs@powersources.de

Aspiration system

Natural aspiration via dry air filter.

Aspired air flow 1.87 m3/min

Injection system

Rotating injection pump with mechanical governor. Fuel filter and pre-filter.

Electrical system

12 V electric starting system. Axial starter motor. 70 A.h. battery. 55 Amp battery charging alternator. Oil pressure and engine temperature sensors.

Protection system

Automatic engine shutdown for low oil pressure, low fuel level, high temperature, battery charge defect and overload.

Exhaust system

Consists of silencer with 10 db(A) noise reduction, flexible exhaust pipe and brackets. Residential silencer optional.

ALTERNATOR

Synchronous, three phase and brushless. Self regulation via automatic voltage regulator maintaining voltage within +/- 1.5%. Class “H” insulation. All windings are impregnated with polyester resin, making them resistant to acids and oil. IP 23 protection. Electrical characteristics to BS 5000, VDE 0530, UTE 5100, NEMA MG 1-22, CMA IEC 34, CSA 22,2 and AS 1359. Harmonic distortion below 3.5%. Radio interference suppression to BS-800.

Manufacturer .....Stamford
Model.....BC 184 C

PowerSources
Produktion u. Vertrieb von Stromversorgungen

ROBERT-BOSCH-STR. 7 D - 40668 MEERBUSCH
TEL.: +49 - 2150 - 91 28 00
Fax: +49 - 2150 - 91 28 09
http: www.powersources.de
E-mail: wvs@powersources.de

STATIONARY Version — Series DPS27

In the stationary version, the set is supplied on a skidbase with a soundproofed metal canopy housing the control panel which is operated manually using an ignition key.

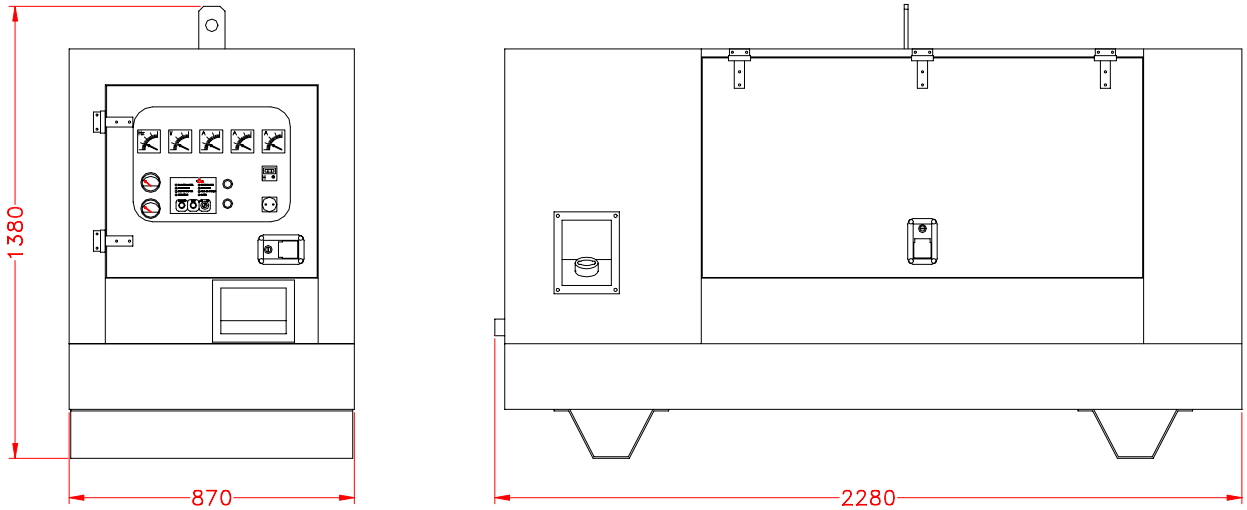

Metal canopy

Ideal for outdoor use, it is finished with a phosphate coating and a long lasting top coat of paint

Control panel

Metal cabinet, with IP 54 protection, mounted on the frame with anti-vibration pads.

Equipped with:

- Automatic circuit breaker.
- Ammeter.
- Ammeter selector switch.
- Frequency meter.
- Voltmeter with selector switch..
- Hours run meter.
- Three phase output terminals.
- Engine temperature gauge.
- Fuel gauge.
- Battery charge gauge.
- Overcurrent indicator lamp.
- On light.
- Heater button.

Control card including: ignition key, start/stop buttons and Indicator lights for low oil pressure, battery charge, high temperature, low fuel level, overload and start-up failure.

PowerSources
Produktion u. Vertrieb von Stromversorgungen

ROBERT-BOSCH-STR. 7 D - 40668 MEERBUSCH
TEL.: +49 - 2150 - 91 28 00
Fax: +49 - 2150 - 91 28 09
http: www.powersources.de
E-mail: wvs@powersources.de

MOBILE Version — Series DPS27-M

Set on baseframe mounted on independent trailer. Incorporates metal canopy housing the control panel which is operated manually via an ignition key.

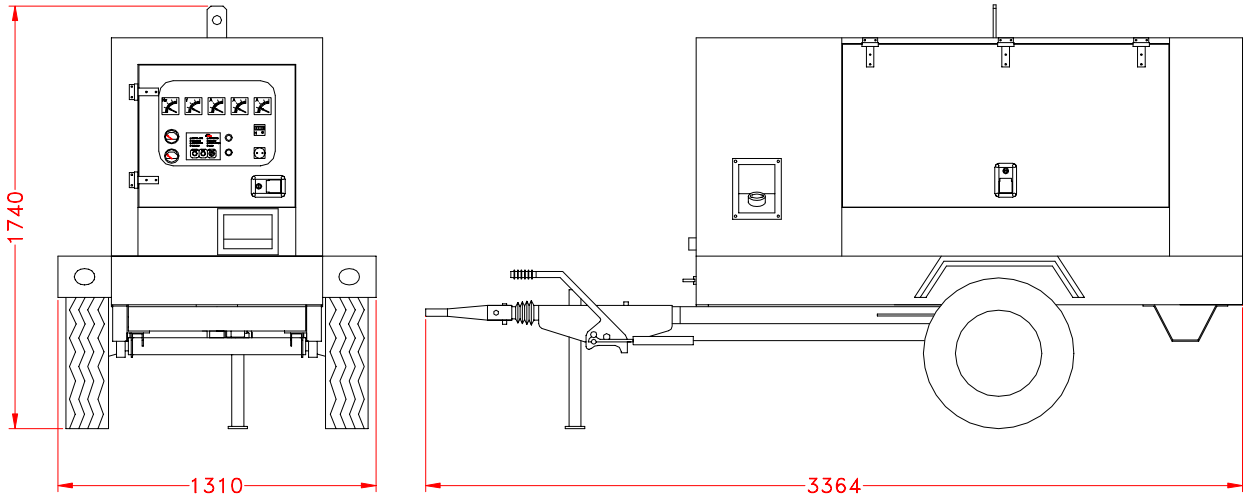

Metal canopy

Ideal for outdoor use, it is finished with a phosphate coating and a long lasting top coat of paint

Trailer

Made up of: wheels with tyres, DIN towing eye, rubber axle suspension, surge brake and support leg. Jockey wheel on request.

As an option, A TRAILER ADAPTED FOR ROAD TRANSPORTATION may be supplied

Control panel

Metal cabinet, with IP 54 protection, mounted on the frame with anti-vibration pads.

Equipped with:

- Thermo - magnetic circuit breaker.
- 3 Ammeters.
- Frequency meter.
- Voltmeter with selector switch.
- Hours run meter.
- Three phase output terminals.
- Engine temperature gauge.
- Fuel gauge.
- On light.
- Heater button.

Control card including: ignition key, start/stop buttons and Indicator lights for low oil pressure, battery charge, high temperature, low fuel level, overload and start-up failure.

PowerSources
Produktion u. Vertrieb von Stromversorgungen

ROBERT-BOSCH-STR. 7 D - 40668 MEERBUSCH
TEL.: +49 - 2150 - 91 28 00
Fax: +49 - 2150 - 91 28 09
http: www.powersources.de
E-mail: wvs@powersources.de

AUTOMATIC Version — Series DPS27-A

The automatic version generator set is supplied on a skidbase with an automatic start/stop panel for mains failure. Soundproofed metal canopy with relay box.

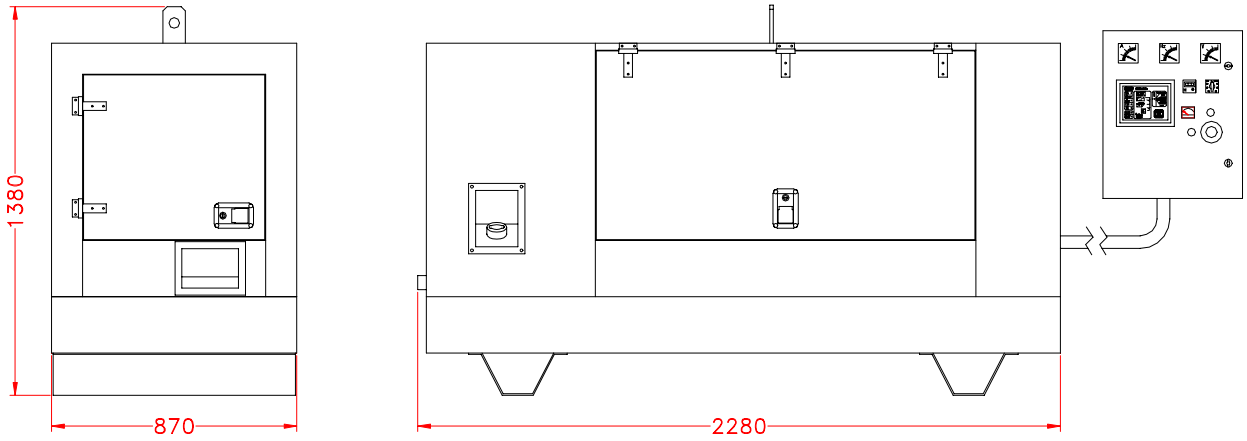

ELECTRICAL PANEL

Mounted in metal cabinet with IP 54 protection for wall mounting. Includes control, measuring and transfer system.

Monitoring and control system

Automatically monitors the mains, and, if the mains fails (in one or all three phases) connects the consumers to the generator set via contactors which are mechanically and electronically activated. When the mains is restored, the load is reconnected to the mains, the set idles and then stops. Equipped with:

- Push button controls, indicating lamp and protection fuses.
- No. of start up attempts: 3
- Three phase voltage monitor with adjustable values.

Measuring equipment

Consists of the following items:

- 1 Ammeter
- 1 Voltmeter
- 1 Mains-generator set voltmeter switch
- 1 Frequency meter
- 1 Battery voltmeter
- Selector switch for Disconnect, Automatic Service, Manual Service and Test
- Off button.
- Start-up selector switch.
- Heater indicator lamp
- Battery maintenance system.
- Battery indicator lamp
- Audible alarm for faults
- Visible alarm system for low oil pressure, high temperature and/or overload
- Large emergency stop push button.

The set may be selected to run manually or automatically. When running manually a pushbutton is used for shutdown and a selector switch is used for start up and changeover.

Transfer system

Made up of two mechanically and electrically activated 60 A contactors. WORKING VOLTAGE: 380/220 V

Heater

In this version, the set incorporates a heater which aids diesel engine start-up and response. It consists of a tank connected to the engine cooling system and a heating element with an adjustable thermostat.