PowerSources
Produktion u. Vertrieb von Stromversorgungen

ROBERT-BOSCH-STR. 7 D - 40668 MEERBUSCH
TEL.: +49 - 2150 - 9128 00
Fax: +49 - 2150 - 9128 09
http: www.powersources.de
E-mail: wvs@powersources.de

HIGH POWER INDUSTRIAL GENSET DV-460

POWER RATING	1500 rpm/50 Hz	1800 rpm/60 Hz
Prime	463 kVA, 370 kW	511 kVA, 409 kW
Standby	509 kVA, 407 kW	563 kVA, 450 kW

Generator set consisting of engine and alternator mounted on a fabricated steel profile base, finished with a phosphate coating and top coat.

The alternator is directly coupled to the engine flywheel housing to SAE standards. The rotor is fixed to the flywheel using steel discs for flexibilty. Perfect alignment and the absence of vibration are thus guaranteed.

The unit is fixed to the baseframe using anti-vibration pads.

ENGINE

Type .....4 stroke diesel with direct injection.

TECHNICAL DATA

Manufacturer .....Volvo Penta
Model.....TAD 1630 G
No. of cylinders.....6
Engine capacity .....16 120 cc
Bore.....144 mm
Stroke.....165 mm
Compression ratio .....15 : 1
Aspiration .....Turbocharged
Cooling .....Water
Engine speed 50 / 60 Hz .....1500 / 1800 rpm
Prime power 50 / 60 Hz.....554/ 612 hp ISO 3046
Fuel consumption 100% load 50 / 60 Hz.....99 / 112 ltr/h
Fuel tank capacity .....710 litres
Approximate running time without refill 50 / 60 Hz.....7.2 / 6.3 hours

Cooling system

Closed circuit water cooled with expander tank included in the radiator. Tropicalised radiator and pusher fan with guard. Equipped to work at ambient temperature of up to 52º C.

Cooling air flow from fan 50 / 60 Hz ..... 273 / 354 m3/min
Cooling system capacity..... ..... 60 litres

Lubrication system

Forced lubrication using gear driven pump. Oil filter

Oil sump capacity ..... 57 litres
Consumption ..... 0.11 ltr/h

ROBERT-BOSCH-STR. 7 D - 40668 MEERBUSCH
TEL.: +49 - 2150 - 9128 00
Fax: +49 - 2150 - 9128 09
http: www.powersources.de
E-mail: wvs@powersources.de

Aspiration system

Turbocharged aspiration via dry air filter and intermediate water cooling of aspired air.

Aspired air flow 32 m3/min

Injection system

Injection pump in-line with centrifugal governor. Fuel filter and pre-filter.

Electrical system

24 V electric starting system. Axial starter motor. 2x180 A.h. battery. 60 Amp battery charging alternator. Oil pressure and engine temperature sensors.

Protection system

Automatic engine shutdown for low oil pressure, low fuel level, high temperature and battery charge defect.

Exhaust system

Consists of silencer with 10 db(A) noise reduction, flexible exhaust pipe and brackets. Residential silencer optional.

ALTERNATOR

Synchronous, three phase and brushless. Self regulation via automatic voltage regulator maintaining voltage within +/- 1.5%. Class “H” insulation. All windings are impregnated with ployester resin varnish, making them resistant to acids and oil. IP 22 protection. Electrical characteristics to BS 5000, VDE 0530, UTE 5100, NEMA MG 1-22, CMA IEC 34, CSA 22,2 and AS 1359. Harmonic distortion below 3,5%. Radio interference suppression to BS-800.

Manufacturer	Stamford
Model	HC 544 C
Power rating	450 kVA at 1500;550 kVA at 1800rpm
Voltage (*)	380/220 V three phase
Frequency	50 / 60 Hz
Speed	1500 / 1800 rpm
Regulation	Electronic
Nominal current	684 A

(*) 12 wire output permitting reconnection to any existing voltage.

VERSIONS

The **DV 460** generator set may be supplied in the following versions:

- **STATIONARY**
- **STATIONARY WITH CANOPY**
- **MOBILE WITH CANOPY**
- **AUTOMATIC**

ROBERT-BOSCH-STR. 7 D - 40668 MEERBUSCH
TEL.: +49 - 2150 - 9128 00
Fax: +49 - 2150 - 9128 09
http: www.powersources.de
E-mail: wvs@powersources.de

STATIONARY VERSION DV-460

In the stationary version, the set is supplied on a skidbase with a control panel operated manually using an ignition key.

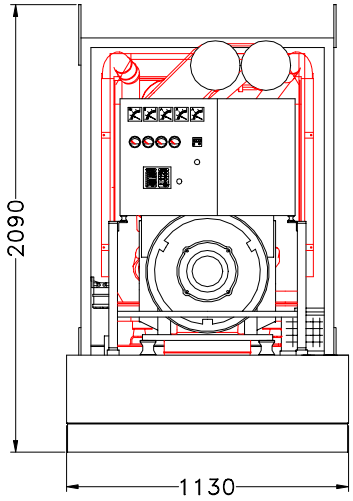

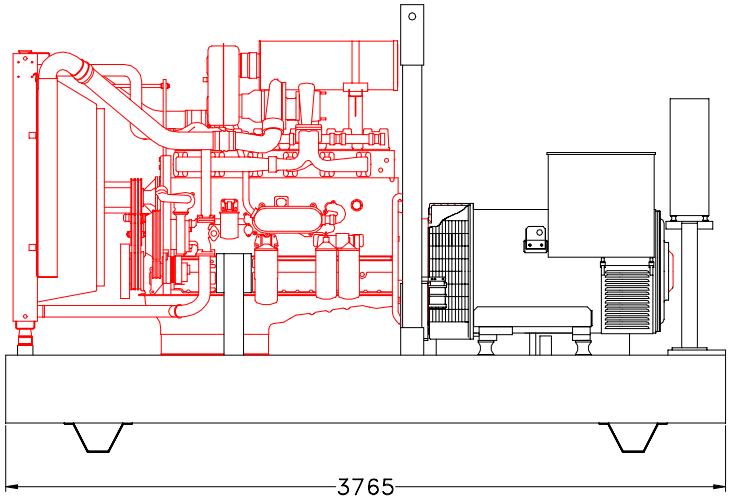

Control panel

Metal cabinet, with IP 54 protection, mounted on the frame with anti-vibration pads.

Equipped with:

- 3 Ammeters.
- Frequency meter.
- Voltmeter with selector switch.
- Hours run meter.
- Three phase output terminals.
- Engine temperature gauge.
- Fuel gauge.
- Oil pressure gauge.
- Battery charge ammeter
- On light.
- Heater button.
- Overcurrent indicator lamp.

Control board including: ignition key, start/stop buttons and indicator lamps for low oil pressure, battery charge, high temperature, low fuel level, overload and start-up failure.

Power panel

In metal cabinet, with IP 54 protection, mounted on frame with anti-vibration pads.

Equipped with automatic circuit breaker.

PowerSources
Produktion u. Vertrieb von Stromversorgungen

ROBERT-BOSCH-STR. 7 D - 40668 MEERBUSCH
TEL.: +49 - 2150 - 9128 00
Fax: +49 - 2150 - 9128 09
http: www.powersources.de
E-mail: wvs@powersources.de

STATIONARY VERSION WITH CANOPY DV-460

In this version, the set is supplied on a skidbase with a metal canopy for outdoor use. The control panel is set in the canopy and is operated manually using an ignition key.

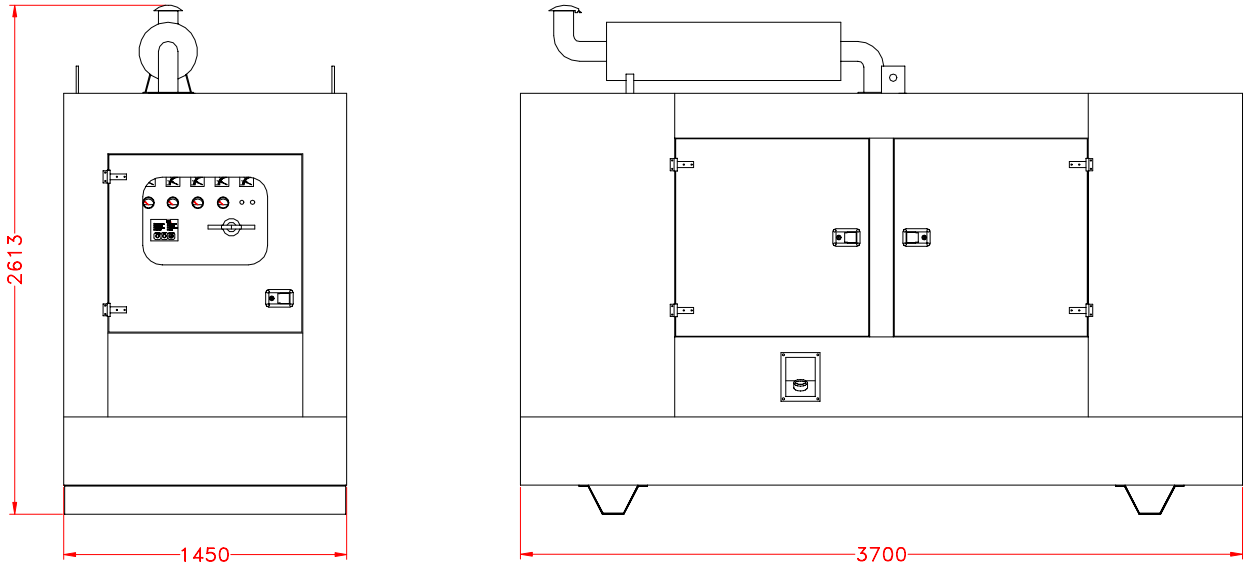

Metal canopy

Ideal for outdoor use, it is finished with a phosphate coating and a long lasting top coat of paint

Control panel

Metal cabinet, with IP 54 protection, mounted on the baseframe with anti-vibration pads. Equipped with:

- 3 Ammeters.
- Frequency meter.
- Voltmeter with selector switch.
- Hours run meter.
- Three phase output terminals.
- Engine temperature gauge.
- Fuel gauge.
- Oil pressure gauge.
- Battery charge ammeter
- On light.
- Heater button.
- Overcurrent indicator lamp.

Control board including: ignition key, start/stop buttons and indicator lamps for low oil pressure, battery charge, high temperature, low fuel level, overload and start-up failure.

Power panel

In metal cabinet, with IP 54 protection, mounted on frame with anti-vibration pads.
Equipped with automatic circuit breaker.

PowerSources
Produktion u. Vertrieb von Stromversorgungen

ROBERT-BOSCH-STR. 7 D - 40668 MEERBUSCH
TEL.: +49 - 2150 - 9128 00
Fax: +49 - 2150 - 9128 09
http: www.powersources.de
E-mail: wvs@powersources.de

MOBILE VERSION WITH CANOPY DV-460

Set on baseframe mounted on independent trailer. Incorporates metal canopy housing the control panel and is operated manually via an ignition key.

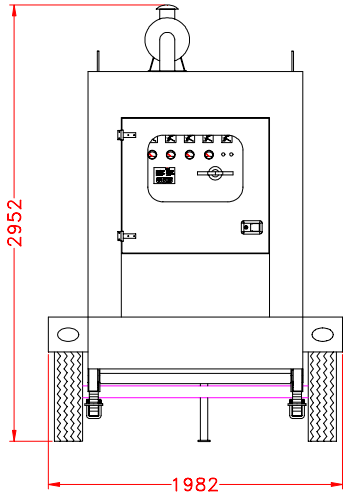

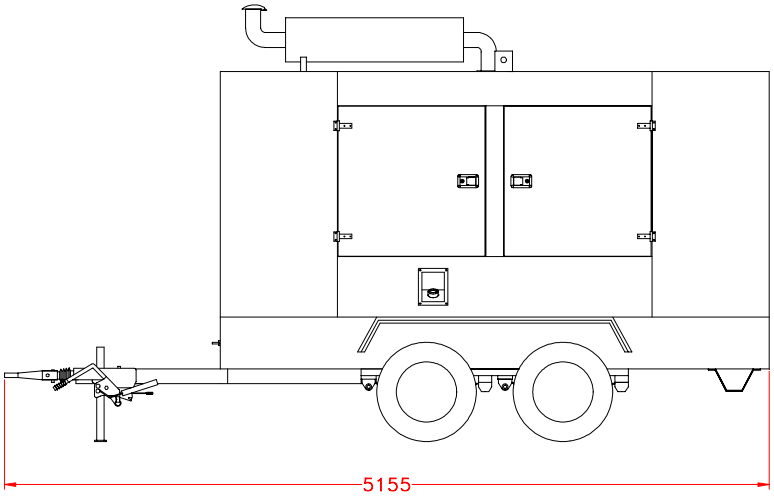

Metal canopy

Ideal for outdoor use, it is finished with a phosphate coating and a long lasting top coat of paint

Trailer

Made up of: wheels with pneumatic tyres, DIN towing eye, double rubber axle suspension, surge brake and support leg. Jockey wheel on request. As an option, a trailer adapted for road transportation may also be supplied.

Control panel

Metal cabinet, with IP 54 protection, mounted on the baseframe with anti-vibration pads. Equipped with:

- 3 Ammeters.
- Frequency meter.
- Voltmeter with selector switch.
- Hours run meter.
- Three phase output terminals.
- Engine temperature gauge.
- Fuel gauge.
- Oil pressure gauge.
- Battery charge ammeter
- On light.
- Heater button.
- Overcurrent indicator lamp.

Control board including: ignition key, start/stop buttons and indicator lamps for low oil pressure, battery charge, high temperature, low fuel level, overload and start-up failure.

Power panel

In metal cabinet, with IP 54 protection, mounted on frame with anti-vibration pads.
Equipped with automatic circuit breaker.

ROBERT-BOSCH-STR. 7 D - 40668 MEERBUSCH
TEL.: +49 - 2150 - 9128 00
Fax: +49 - 2150 - 9128 09
http: www.powersources.de
E-mail: wvs@powersources.de

AUTOMATIC VERSION DV-460

The automatic version generator set is supplied on a skidbase with an automatic start/stop panel for mains failure.

ELECTRICAL PANEL

Mounted in a metal cabinet with IP 54 protection and supplied loose for wall mounting.Includes control, measuring and transfer system.

Monitoring and control system

Automatically monitors the mains, and, if the mains fails (in one or all three phases) connects the consumers to the generator set via contactors which are mechanically and electronically activated. When the mains is restored, the load is reconnected to the mains, the set idles and then stops. Equipped with:

- Push button controls, indicator lamp and protection fuses.
- No. of start up attempts: 3
- Three phase voltage monitor with adjustable values.

Measuring equipment

Consists of the following items:

- 3 Ammeters
- 1 Voltmeter
- 1 mains-generator set voltmeter selector switch.
- 1 Frequency meter
- 1 Battery voltmeter.
- Selector switch for Disconnect, Automatic Service, Manual Service and Test
- Off button.
- Start-up selector switch.
- Heater indicator lamp.
- Battery maintenance system.
- Audible alarm for faults
- Visual alarm system for low oil pressure, high temperature and/or overload.
- Large emergency stop push button.

The set may be selected to run manually or automatically: When running manually a pushbutton is used for shutdown and a selector switch is used for start-up and changeover.

TRANSFER SYSTEM

Made up of two 800 A contactors with mechanical and electrical activation

WORKING VOLTAGE: 380/220 V

HEATER

In this version, the set incorporates a heater which aids diesel engine start-up and response. It consists of a tank connected to the engine cooling system and a heating element with an adjustable thermostat.